INDERSCIENCE PUBLISHERS
Linking academia, business and industry through research

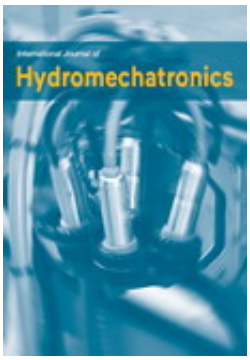

International Journal of Hydromechatronics

ISSN online: 2515-0472 - ISSN print: 2515-0464
https://www.inderscience.com/ijhm

Study on high frequency response characteristics of a moving-coil-type linear actuator using the coils combinations

Yueyu Wu, Mengdi Liu, Gong Zhang, Zhicheng Hou, Qunxu Lin, Hai Yuan

DOI: 10.1504/IJHM.2022.10047257

Article History:

Received:	28 August 2021
Last revised:	29 April 2022
Accepted:	26 February 2022
Published online:	25 August 2022

Copyright © Inderscience Enterprises Ltd.

Study on high frequency response characteristics of a moving-coil-type linear actuator using the coils combinations

Yueyu Wu

Frontier Science and Technology Research Center,
Guangzhou Institute of Advanced Technology,
Guangzhou, 511458, China
Email: yy.wu@giat.ac.cn

Mengdi Liu

Frontier Science and Technology Research Center,
Guangzhou Institute of Advanced Technology,
Guangzhou, 511458, China
and
Shenzhen Institutes of Advanced Technology,
Chinese Academy of Sciences,
Shenzhen, 518055, China
Email: md.liu@giat.ac.cn

Gong Zhang*

Frontier Science and Technology Research Center,
Guangzhou Institute of Advanced Technology,
Guangzhou, 511458, China
and
Shenzhen Institutes of Advanced Technology,
Chinese Academy of Sciences,
Shenzhen, 518055, China
and
School of Engineering Science,
University of Chinese Academy of Sciences,
Beijing, 100049, China
Email: gong.zhang@giat.ac.cn
*Corresponding author

Zhicheng Hou

School of Automation,
Guangdong Polytechnic Normal University,
Guangzhou, 510665, China
Email: zhicheng.hou@gpnu.edu.cn

Copyright © 2022 Inderscience Enterprises Ltd.

Qunxu Lin

School of Railway Transportation,
Wuyi University,
Jiangmen, 529020, China
Email: gdjtxy@mail.wyu.edu.cn

Hai Yuan

Frontier Science and Technology Research Center,
Guangzhou Institute of Advanced Technology,
Guangzhou, 511458, China
and
Shenzhen Institutes of Advanced Technology,
Chinese Academy of Sciences,
Shenzhen, 518055, China
Email: hai.yuan@giat.ac.cn

Abstract: This paper addresses the problem of dynamic characteristics of a moving-coil-type linear actuator (MctLA) to satisfy the requirements of higher output electromagnetic force and faster response time. A novel coils combination approach is presented because the time constant and the electrified currents are highly relevant to the resistance and the inductance. A general coil is divided into several segments and then used in parallel and series so that three different combinations of the electrified coils are developed. A mathematical model related to the output electromagnetic force, displacement response time, acceleration of the proposed MctLA is presented, respectively. Simulations results show that if the electrified coils are divided into three sections and used in parallel, the dynamic and static performances of the proposed MctLA are greatly improved. Numerical simulation and experimental results prove the usefulness of the electrified coils combinations approach, and the proposed MctLA can display high frequency response characteristics.

Keywords: linear actuator; moving coil type; coils combinations; high frequency response; experimental investigation.

Reference to this paper should be made as follows: Wu, Y., Liu, M., Zhang, G., Hou, Z., Lin, Q. and Yuan, H. (2022) 'Study on high frequency response characteristics of a moving-coil-type linear actuator using the coils combinations', *Int. J. Hydromechatronics*, Vol. 5, No. 3, pp.226–242.

Biographical notes: Yueyu Wu received her Master's degree in Mechanical Engineering from Wuyi University in 2021. Currently, she is an Assistant Engineer at Frontier Science and Technology Research Center, Guangzhou Institute of Advanced Technology, Guangzhou, China. Her current research interests include multi-robot innovative collaboration and control.

Mengdi Liu is a graduate student in reading in Shenzhen Institutes of Advanced Technology, Chinese Academy of Sciences, specialises in materials and chemical engineering. She graduated from Electrical Engineering and Automation of College of New Energy in China University of Petroleum (East China), acquire the degree of Bachelor of Engineering.

Gong Zhang is a Professor and Doctoral Supervisor. His main research interests are in multi-robot innovative collaboration and human-robot intelligent collaboration. He has presided over 11 national, provincial and municipal research projects with a total of over CNY 30 million as a principal investigator. He has co-authored more than 119 publications with total times cited 144 and H-index 4, and acquired over 238 pending or issued patents.

Zhicheng Hou received his PhD in Control Engineering from the Université de Technologie de Compiègne, Compiègne, France in 2016. Currently, he is an Associate Professor at the School of Automation, Guangdong Polytechnic Normal University, Guangzhou, China. His current research interests include nonlinear control and multirobot systems.

Qunxu Lin received his PhD from SouthWest JiaoTong University, China in 2012. His main research areas include mobile robot, intelligent logistics system. Currently, he is currently an Associate Professor at WuYi University, China.

Hai Yuan received is PhD from Nanyang Technological University, Singapore. He is currently a Director and Professor at the Guangzhou Institute of Advanced Technology, Guangzhou, China. His current research interests include creature equipment and advanced robot.

1 Introduction

Electromechanical converter system that is popularly used in various human activity fields, where direct conversion of magnetic field energy to mechanical energy is fulfilled (Baginsky and Kostsov, 2019). The performance of an electromechanical converter greatly relies on the initial values of magnetic field intensity (Stachowiak and Demenko, 2020). A moving-coil-type linear actuator (MctLA) is popularly used in electromechanical converter system as a short stroke linear motor to produce an electromagnetic force in proportion to the electrified coil current. Therefore, the MctLA could play a key role as a converter of current-force (Tominari and Sato, 2019). Especially, the MctLAs, which can completely eliminate the radial forces easily, thereby leading to high efficiency, have a strong appeal to various industry driving fields, especially for aerospace or defence applications (Dang et al., 2019). The MctLAs could produce translational motions in high efficiency because of the absence of motion conversion components such as gears and screws (Yan et al., 2018). Particularly, the MctLAs have been developed as a mainstream driving source for various industry driving fields to fulfil the requirements of low noise, high-speed, easy maintenance (Kim and Jung, 2009).

However, the MctLAs have the hysteresis appearing in its current-force characteristics, which mainly caused by magnetic hysteresis (Tominari and Sato, 2019). Due to the influence of coil winding power, the MctLAs have been restricted to improve the dynamic characteristic. Therefore, a new design with double push rods is presented to push or pull according to the current direction and realise rapid operation of load (Wang et al., 2019). It was revealed in (Wang et al., 2020) that a static multi-objective optimisation strategy for a MctLA was proposed based on a genetic algorithm to optimise the static push-force. The generated electromagnetic force provided by the electrified coil

and magnetic field was practically 2.5 times larger than those provided by solenoid valve with the same sizes (Hirohisa, 2000; Zhang et al., 2007).

In this present study, limited to the eddy currents generated in magnetic materials decrease the electromagnetic forces provided by the electrified coils (Yao and Xu, 2002). These problems confine the range of applications to which the proportional solenoid could be utilised (Lindler and Anderson, 2002; Wu et al., 2007). In order to improve the generated electromagnetic force, a MctLA with the slot of the core part removed was proposed (Kim and Jung, 2009).

Some research studies have been reported that the plunger-type electromagnets are rather more ordinarily applied for the MctLAs. Eddy currents are induced in transient states, which could delay the actuator response to electrical excitation (Nowak, 1989). A rapid response characteristic to the electrical excitation is mandatory in various applications of the MctLAs. One interesting study revealed some exceptional constructions or systems are introduced to improve the response time (Tan et al., 2004).

A novel low inertia rotary electromagnet with coreless rotor structure was proposed (Meng et al., 2011). The simulation frequency width is 230 Hz/–3 dB, 240 Hz/–90° approximately and the simulation rise time for step response is about 4.3 ms. The experimental results are in a close agreement with the simulation results, which the experimental frequency width is about 220 Hz/–3 dB, 220 Hz/–90° and experimental rise time is 5.6 ms approximately. The relationship between proportional electromagnet coil number of turns, inductance and output force as well as the magnetic leakage was discussed (Tang and Xu, 2019). Results show that the diameter of the nominal diameter is 0.62 mm, the maximum diameter of the enamelled wire is 0.67 mm, and the number of turns is 388 turns. The step response time constant of proportional solenoid is about 20 ms and the transition time is about 80 ms. In order to solve the problem of energy supply for smart wearable devices, a wearable human foot mechanical energy harvesting device based on moving-coil generator was proposed (Ding et al., 2019). It has good high frequency characteristics when the open circuit voltage is 3.16 V with 21.5 Ω resistance.

This paper generalises the novel coils combination approach to fulfil the high frequency response motion control of a MctLA. Because the time constant and the electrified coils currents are closely related to the resistance and the inductance, a general coil is averagely divided into several segments and then used in parallel and series so that three different combinations of the electrified coils are developed. For the system studied, a novel two-way reversible control approach is put forward and a pulse-width modulation (PWM) amplifier which is built-in electronic commutation provides a force in proportion to the input signal.

Hence, the proposed MctLA is presented in which the displacement response time, the response speed, the electromagnetic force, the acceleration is calculated theoretically. Simulation calculations are performed and analytical results are acquired. Furthermore, experimental investigations are conducted as well in order to validate the control approach for the proposed MctLA.

The rest of this paper is organised as follows: Section 2 presents the geometry of the proposed MctLA; Section 3 shows the coils combination approach; Section 4 represents the modelling and simulation; Section 5 shows the experimental investigations; Section 6 gives the conclusion and perspective.

2 Geometry of the proposed MctLA

In this section, a schematic diagram of a MctLA designed in this paper is represented in Figure 1. As evident in Figure 1, the proposed MctLA components consist of right end shield (RES), iron core, electrified coil, permanent magnet (PM), connector, output shaft (OS), thrust coil bobbin (TCB), left end shield (LES), etc. PM plays an important role in which is widely used to convert electrical energy to mechanical energy, various systems using the high-energy PMs products have been produced and distributed mainly through the factory automation field (Kim and Jung, 2009).

In addition, as seen in Figure 1, several PMs are attached on the inner of the RES. An iron core is attached in the centre of the RES by several screws, and a coil is wrapped on the TCB. The TCB subassembly connected to both the OS and the guide pin could keep reciprocating linear motion with high frequency in an airtight cavity which is enclosed by the RES, LES, PMs, iron core, etc.

Figure 1 An overview of the proposed MctLA (see online version for colours)

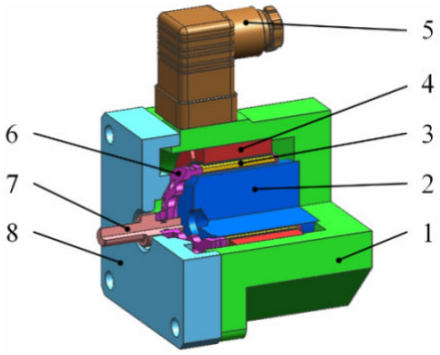

Notes: 1 – right end shield, 2 – iron core, 3 – electrified coil, 4 – PMs, 5 – connector, 6 – thrust coil bobbin, 7 – output shaft, 8 – left end shield)

Figure 2 Control schematics of the proposed MctLA (see online version for colours)

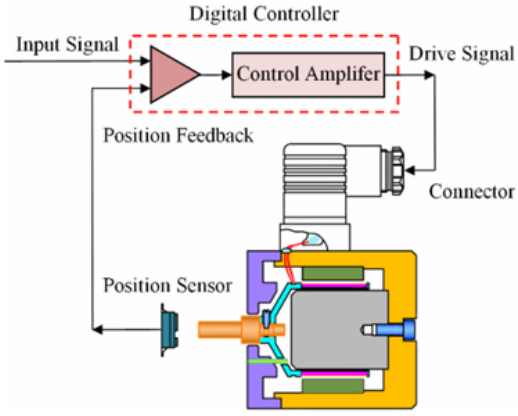

Figure 2 reveals control schematics for the proposed MctLA. As evident, the digital controller gathers the input voltage signal and position feedback signal which is provided

by the displacement sensor located on the OS, which can be further become as resultant voltage signal. After compiled by the control amplifier, the digital controller could offer a drive current signal to the electrified coils through the connector.

If the coil is energised by ideally sinusoidal phase voltage signal via the connector, the TCB subassembly together with the OS will realise the linear reciprocating motion because of the Ampere force due to the permanent magnetic field provided by PMs. By doing this, the proposed MctLA could be a moving-coil type bi-directional linear actuator, which is the research object of this paper.

3 Coils combination approach

The main function of the MctLA coils widely used to control actuators is to convert electrical energy into mechanical energy (Feng et al., 2014). Normally, a single coil is used for the coil winding, which is difficult to upgrade the response time and speed, electromagnetic force, and is limited to satisfy the requirements of environmental protection and energy saving (Luo et al., 2016).

Thus, the general coils are proposed to be divided into multi-segments averagely so as to be used in parallel in this section. By doing this, the approach can greatly cut down the weight and the material consumption, and could meet the requirements of the high frequency response and the great electromagnetic force.

When it comes to PWM control loop, cycle work signals which are input by D flip-flop are adopted to control the coils cycle work. PWM is used to control the current magnitude; the duty cycle of signals is to be controlled to satisfy current magnitude so that the electromagnetic force is also changed. In the meantime, double corresponding transistors are in turn kept open and close via gate circuits using the input signal and pulse oscillation signal.

In order to fulfil the requirements of high frequency characteristics, PWM pulse are controlled by the transistors to phase difference of 180°, which is given in Figure 3. In addition, Figure 4 compares three different combinations of electrified coils based on the switch state of the PWM circuit presented in Figure 3.

1 combination A in series (combination A for short): only the switch S1 is closed, and the resistance and inductance are RS1 and LS1, respectively, which is shown in Figure 4(a)

2 combination B in single group (combination B for short): both the switches S1 and S3 are closed, the resistance and inductance are RS2 and LS2, respectively, which is shown in Figure 4(b)

3 combination C in parallel (combination C for short): the switches S1, S2 and S3 are all closed, the resistance and inductance are RS3 and LS3, respectively, which is shown in Figure 4(c).

By way of coils transformation of segmentation and combination, the advantage of the proposed MctLA could reduce working time and increase response speed. When it comes to the electrified coils of the proposed MctLA, a novel combination by coils splitting in series or in parallel is presented. The PWM technique could be used to control the direction and magnitude of the proposed electrified coils current.

Figure 3 PWM circuit of the proposed MctLA

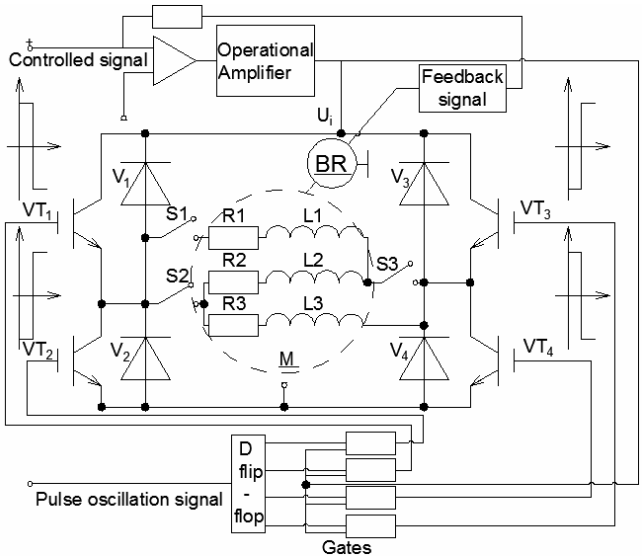

Figure 4 Layout of different coil circuits, (a) combination A (b) combination B (c) combination C

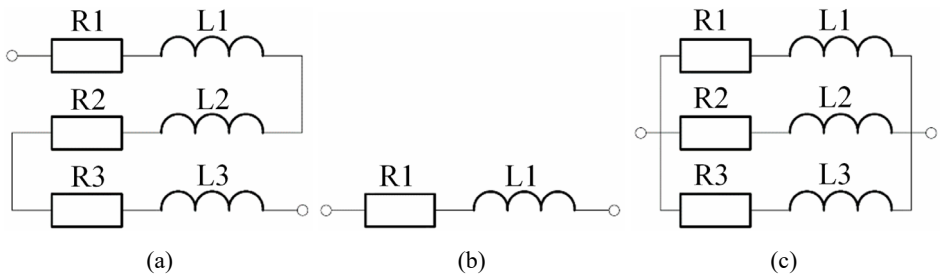

Regardless of the coil current magnitude, the inductance presents the coils inherent characteristics (Chang et al., 2008), which is written as:

$$L_i = C_i N^2 D_i / 1{,}000 \tag{1}$$

where N_c is number of turns; D_i is wire diameter (m); C_i is coefficient, which is related to coil diameter D_i and coil length in winding l_i.

On account of the constant input voltage, the inductance and resistance of the electrified coils could have an effect upon the current magnitude and the time constant of the overall circuits. Because of the invariability of the single-coil current I, the response time t of the proposed MctLA could be expressed as:

$$t = -T \ln(1 - RI/U) \tag{2}$$

where T is the time constant (s); I is the coil current (A); R is the resistance (Ω); U is the coil voltage (V), L is the coil inductance (H).

Analysing the relationship between the coil resistance and the moving-coil size, the coil inductance is dependent on the square of number of turns, the wire diameter, the coil length in winding. Both the resistance (R) and the inductance (L) of the proposed three coils combinations discussed above are measured through a professional LCR digital multimeter, which are shown in Table 1.

Table 1 Parameters of the proposed three coils combinations

Items	*Units*	*Coils combinations types*		
		A	*B*	*C*
L	H	712×10^{-6}	85×10^{-6}	50×10^{-6}
R	Ω	1.75	0.58	0.19
l_a	m	19.404	7.468	19.404

4 Modelling and simulation

Based on the principle of electrified coils which are working in the constant magnetic field, the force characteristics without loading of MctLA could be expressed as:

$$u = K_u u_i = \left(R_c + r_p\right) i + L\frac{di}{dt} + K_e\frac{dx_c}{dt}, \quad K_e = B_g l_a, \quad F_{cd} = K_i = B_g l_a i \tag{3}$$

where u is the electrified coil voltage (V); i is the electrified coil current (A); K_u is the amplifier gain; u_i is the signal voltage (V); r_p is the amplifier resistance (Ω); R_c is the electrified coil resistance (Ω); K_e is the counter electromotive force constant of electrified coil speed induced; L is the electrified coil inductance (H); E is the induced electromotive force (V); v_c is the OS speed (m/s); x_c is the electrified coils subassembly displacement (m); K_i is the gain of current-force (N/A); B_g is the magnetic flux density of working air-gap (T); l_a is the electrified coil length in winding (m).

The dynamics of the electrified coils subassembly could be written as:

$$F_{cd} = M_c\frac{d^2x_c}{dt^2} + B_c\frac{dx_c}{dt} + K_c x_c \tag{4}$$

where B_c is the damping coefficient (N·s/m); M_c is the mass of the electrified coils subassembly (kg); K_c is the spring coefficient (N/m).

According to equations (3) and (4), the 3-order transfer function which the input voltage u_r is related to the output displacement x_c could be written as:

$$u_r = \frac{LM_c}{K_i}\frac{d^3x_c}{dt^3} + \left(\frac{LB_c + RM_c}{K_i}\right)\frac{d^2x_c}{dt^2} + \left(\frac{LK_c + RB_c + K_eK_i}{K_i}\right)\frac{dx_c}{dt} + \frac{K_cR}{K_i}x_c \tag{5}$$

Using the method of Laplace transform to equation (5), a block diagram of transfer function for the proposed MctLA is developed based on the input of signal voltage u_r and the output of the electrified coils subassembly speed v_c, which is detailed in Figure 5.

Figure 5 Block diagram of transfer function for the proposed MctLA

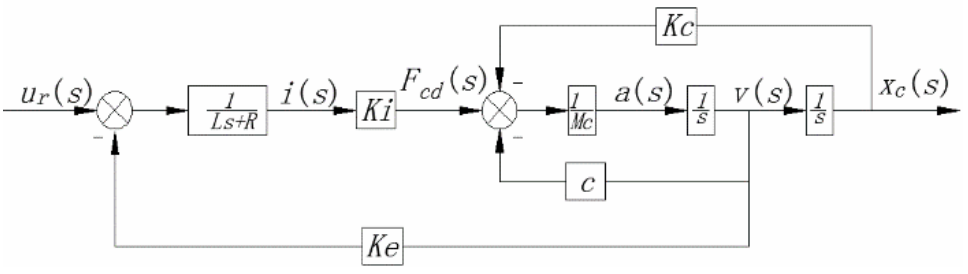

A mathematical model about displacement for the proposed MctLA could be done from Figure 5.

$$G(s)=\frac{X_c(s)}{U_r(s)}=\frac{K_i}{(Ls+R)(M_c s^2+B_c s+K_c)+K_e K_i s} \tag{6}$$

According to equation (6), a block diagram related to electromagnetic force for the proposed MctLA could be gotten in Figure 6.

Figure 6 Block diagram of electromagnetic force for the proposed MctLA

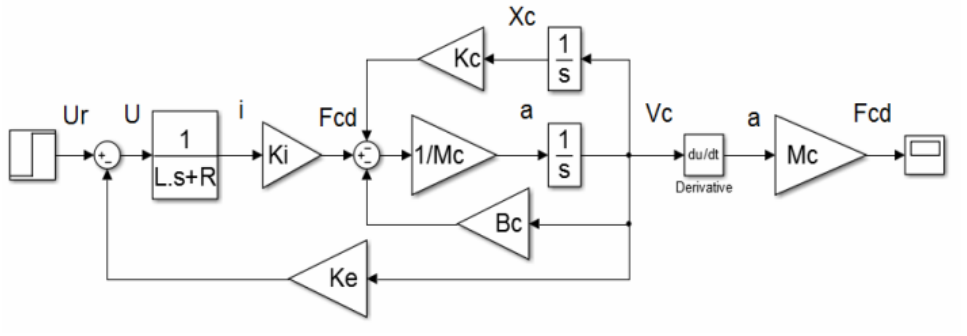

Some natural parameters of the proposed MctLA for three different coils combinations are presented in Table 2.

Table 2 Natural parameters of the proposed MCTLA

Items	*Units*	*Coils transformations types*		
		A	*B*	*C*
Damping coefficient/B_c	N·s/m	0.004	0.004	0.004
Force constant/K_i	N/A	21.345	7.115	21.345
Electrical time constant/T	ms	0.4069	0.1466	0.2632
Spring coefficient/K_c	N/mm	15	15	15
Back coefficient/K_e	Vs/m	21.345	7.115	7.115
Loaded mass/M_c	kg	2	2	2

Figure 7 Characteristics comparison of three different coils combinations, (a) displacement response (b) force response (c) acceleration response (see online version for colours)

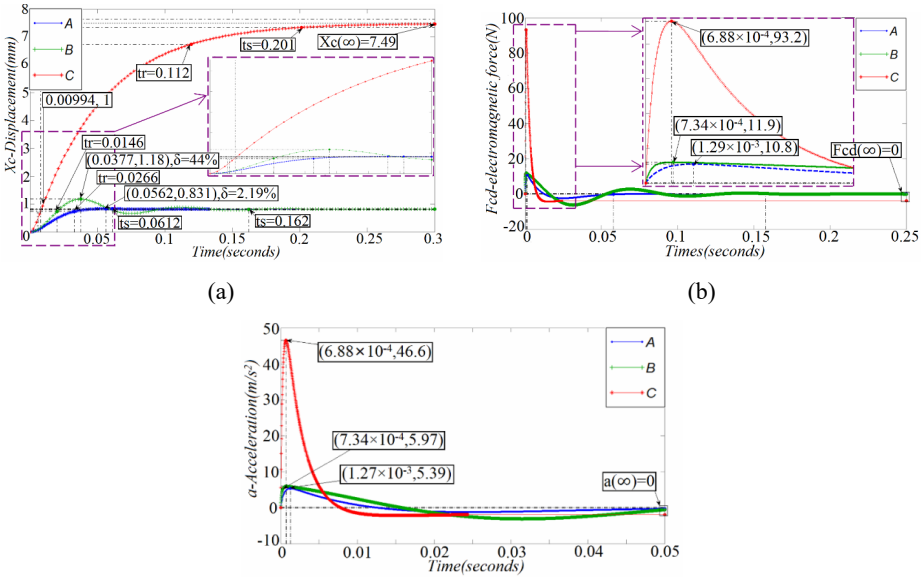

(a) (b)

(c)

The simulation model of MctLA is constructed by MATLAB software according to the parameter combination shown in Table 2. By way of the simulation calculation, Figure 7(a) presents the comparison for the displacement step response characteristics of the proposed MctLA for three different coils combinations. With respect to the unit step input, the amplitude variation of the electrified coil displacement X_c for A and B is a little bit small, the ultimate value is 0.8 mm, the rise time t_r of combinations A and B is just 26.6 ms and 14.6 ms, respectively.

As for combination C, the amplitude variation of the electrified coil displacement X_c is rather larger, the ultimate value is 7.5 mm, the rise time t_r is only 0.112 s. Furthermore, while the displacement X_c of combination C keeps to 1 mm, the rise time t_{Xc} is only 9.94 ms. It can be seen that the electrified coils in parallel can greatly accelerate the displacement response characteristics.

In addition, the comparison for the force step response characteristics of the proposed MctLA for three different coils combinations via the theoretical calculation are detailed in Figure 7(b).

As evident in Figure 7(b), the force amplitude variation F_{cd} for A and B is a little bit small, the ultimate value is just zero, while the peak value F_p of combination A and B is 10.8 N and 11.9 N, respectively. The rise time t_r of combination A and B is 1.29 ms and 0.734 ms, respectively. As for combination C, the amplitude variation is rather larger; the ultimate value is zero as well, the rise time t_r and the peak value F_p keep to 0.688 ms and 93.2 N, respectively.

Moreover, the comparison for the acceleration step response characteristics of the proposed MctLA for three different coils combinations are revealed in Figure 7(c), As seen in Figure 7(c), the amplitude variation of acceleration a of A and B is a little bit

small, the ultimate value is just zero, the peak value F_p of combination A and B is 5.39 m/s^2 and 5.97 m/s^2, respectively. The rise time t_r of combination A and B are 1.29 ms and 0.734 ms, respectively.

However, as for combination C, the amplitude variation is much larger; the ultimate value is zero as well, while the rise time t_r and the peak F_p keep to 0.688 ms and 46.6 m/s^2, respectively.

The characteristics of electromagnetic force F_{cd}, displacement X_c, acceleration a of the proposed MctLA for different coils combinations are compared in Table 3. As evident in Table 3, the displacement response time of B is reduced from 26.6 ms to 14.6 ms compared with combination A. While the response speed of combination B is double improved, electromagnetic force of combination B is increased from 10.8 N to 11.9 N.

Table 3 Performance characteristics of three different coils combinations

Items		*Units*	*Coils transformations types*		
			A	*B*	*C*
X_c	$t_{Xc=1}$	ms	∞	∞	9.94
	t_r	ms	26.6	14.6	11.2
F_{cd}	F_p	N	10.8	11.9	93.2
	t_{Fp}	ms	1.29	0.734	0.688
a	a_p	m/s^2	5.39	5.97	46.6
	t_{Fp}	ms	1.29	0.734	0.688

As for combination C, compared with combination B, the response speed is more than double improved, the displacement response time is decreased from 14.6 ms to 9.94 ms, electromagnetic force is improved to 93.2 N by nearly 8 times. Moreover, the acceleration of combination C is improved by 8.7 times, and the peak response time would be half decreased to 0.688 ms. The results obtained show that if the electrified coils are divided into three sections averagely and then used in parallel, its performance characteristics can be greatly improved, the effectiveness of the proposed method is verified.

5 Experimental investigations

Based on the simulation results of the three different combinations, experimental procedures had been carried out at a proposed MctLA with coils transformation types of combination C under actual testing conditions. The actual prototype of the proposed MctLA is presented in Figure 8.

The duty cycle of signals is to be controlled by PWM to satisfy current magnitude, double corresponding transistors are in turn kept open and close via gate circuits using the input signal and pulse oscillation signal. A PWM amplifier which is built-in electronic commutation provides a force in proportion to the input signal.

A digital controller gathers the input voltage signal and position feedback signal which is provided by the displacement sensor located on the OS, which can be further become as resultant voltage signal. After compiled by the control amplifier, the digital controller could offer a drive current signal to the electrified coils through the connector.

Figure 8 Actual prototype image of the proposed MctLA (see online version for colours)

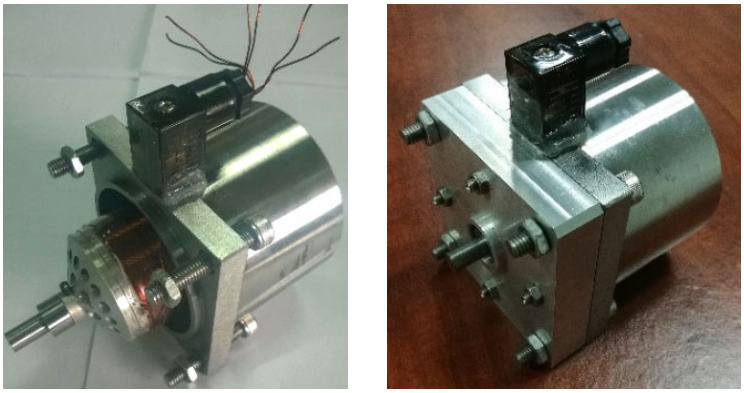

Figure 9 Tracking characteristics under sinusoidal signal, (a) under 1 Hz (b) under 150 Hz, (c) under 260 Hz (d) under 320 Hz

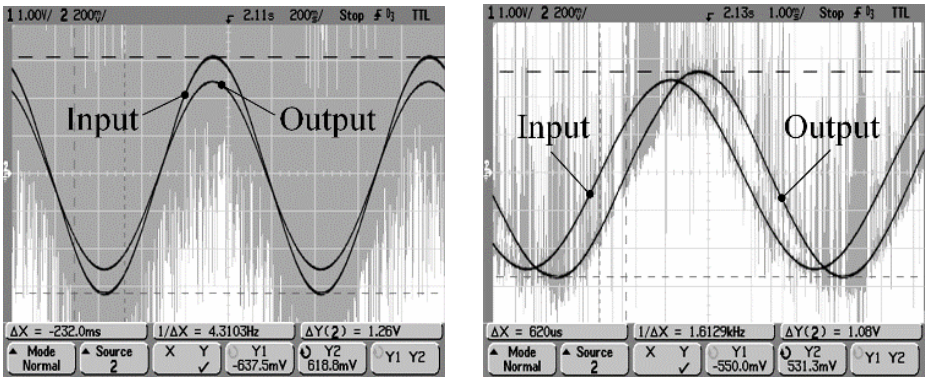

(a) (b)

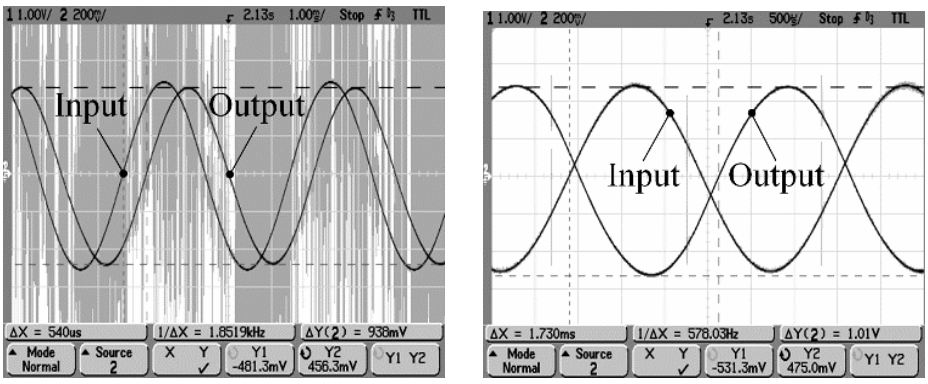

(c) (d)

Ten groups sinusoidal AC voltage are provided by a signal generator to the electrified coils of the TCB, which the frequency changes from 1 Hz to 320 Hz and the amplitude keeps to 5 V. The digital controller gathers the input signals that generated by the signal

generator, and the feedback signal that provided by the displacement sensor located on the OS, are both gathered to the oscilloscope, they could be further become as resultant voltage signal. After compiled by the control amplifier, the digital controller could offer a drive current signal to the electrified coils through the connector. Details are already shown in Figure 2.

Tracking characteristics of four representative sinusoidal signals compared input with output are compared in Figure 9. As detailed in the figure, the output voltage amplitude could be 1.26 V while the input signal frequency is 1 Hz, input and output are provided a quite good linearity, and the phase difference is an approximate zero [Figure 9(a)]. On the other hand, the output voltage amplitude could be 1.08 V when the input signal frequency keeps to 150 Hz. Similarly, input and output are displayed a relatively good linearity, the phase difference is a little bit small as well [Figure 9(b)].

In addition, the output voltage amplitude could be 0.938 V when the input signal frequency is up to 260 Hz, input and output are provided a quite good linearity as well, but the phase difference is rather bigger than ever before [Figure 9(c)]. Finally, the phase difference is more than 90 degrees when the input signal frequency is up to 320 Hz.

Even so, input and output are still displayed a good linearity [Figure 9(d)]. The phase difference is mainly resulted from damping and inertia, which are coil inductance, mass, various frictions in general.

The output voltage amplitude which is given by the aforementioned sensor located on the OS under ten typical input signals frequency which is generated by the proposed signal generator are listed in Table 4.

Table 4 Characteristics of output voltage amplitude for ten typical input

Signals	*Units*	*Amplitude*				
Input signal frequency	Hz	1	7	20	30	100
Output voltage amplitude	V	1.26	1.24	1.24	1.21	1.17
Input signal frequency	Hz	150	200	260	300	320
Output voltage amplitude	V	1.08	1.03	0.938	0.919	1.01

Based on the tracking characteristics of ten typical sinusoidal signals, a chart of the experimental magnitude-frequency characteristics under ten typical input signals frequency are shown in Figure 10. As evident in Figure 10, the experimental frequency of the proposed MctLA could be 300 Hz at 3 dB, which shows high frequency response characteristics.

Figure 10 Experimental magnitude-frequency characteristics under typical input frequency

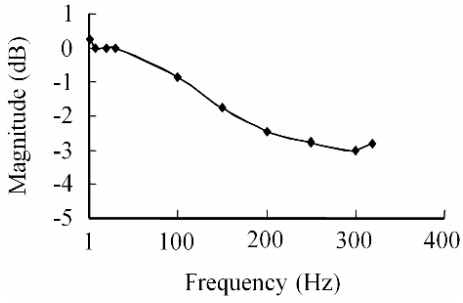

Furthermore, in order to get the step response characteristics, a signal generator provides the square wave signal to the electrified coils of the TCB, which the frequency is 25 Hz and the amplitude is 5 V, the feedback signal provided by the aforementioned sensor located on the OS are gathered to the oscilloscope, which is shown in Figure 11. It can be seen that the experimental step response time of the proposed MctLA is more or less 4 ms, which displays fast response characteristics.

Figure 11 Feedback signal provided by the sensor

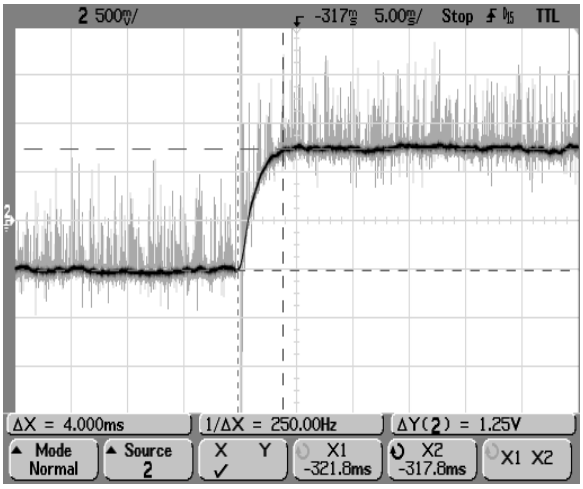

Moreover, in order to verify the relationship between input and output, a signal generator offers a triangle wave signal with the frequency of 12.5 Hz and the amplitude of 2.5 V to the electrified coils of the TCB, the feedback signal provided by the aforementioned sensor located on the OS are also gathered to the oscilloscope, which is shown in Figure 12. It can be seen that input and output are provided a quite good linearity, and the phase difference is only 80 ms.

Figure 12 Tracking characteristics under the triangle wave signal

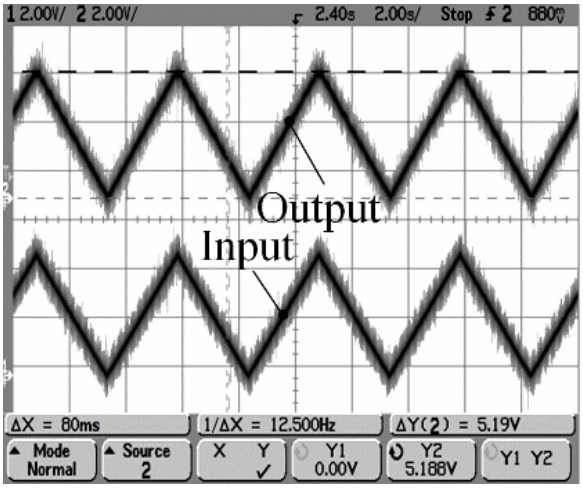

Comparison of key performance under different methods finished by the former scholastic studies (Meng et al., 2011; Tang and Xu, 2019; Ding et al., 2019) is listed in Table 5 experimental investigations demonstrate the validity of the proposed approach, which provides promising results that the proposed MctLA can be significantly improved with high frequency and rapid response.

Table 5 Comparison of key performance under different methods

Characteristics	*This paper*	*Meng et al.*	*Tang and Xu*	*Ding et al.*
Frequency width	300 Hz/–3 dB	220 Hz/–3 dB	/	5.1 Hz/–3 dB
Response time	4 ms	5.6 ms	20 ms	/

6 Conclusions

In this paper, in order to fulfil dynamic characteristics, a proposed MctLA provided with three different coils combinations approach has been constructed for higher output electromagnetic force and faster response time. Thus, the general coils are proposed to be divided into typical three-segments averagely, and developed to be used in parallel and series so that three different combinations, that is combination A in series, combination B in single group, combination C in parallel, are compared. Application of our proposed method should result in much greater performance characteristics.

Simulation calculations are conducted to prove the proposed MctLA, and the experimental investigations for the proposed MctLA with coils transformations types of combination C are performed as well. The theoretical findings are verified by simulation results.

Numerical results show that if the electrified coils are divided into three sections averagely and then used in parallel, that is combination C, the response speed is improved more than double, the step response time is decreased to 9.94 ms, the electromagnetic force is improved by nearly 8 times, the acceleration is 8.7 times bigger, the peak response time is half decreased. Results of several simulations demonstrate that if the electrified coils are divided into three sections averagely and then used in parallel, its performance characteristics can be greatly improved.

The obtained simulation results are validated through experimental findings, the experimental frequency of the proposed MctLA with combination C is 300 Hz at –3 dB, and the response time is about 4 ms, which provides high frequency and fast response characteristics. The input and output are provided a quite good linearity, the phase difference is only 80 ms.

As detailed in this paper, numerical simulation and experimental results prove the usefulness of the electrified coils combinations approach, and the proposed MctLA with coils transformation types of combination C can display high frequency response characteristics.

It is worth noting that the proposed MctLA with coils transformation types of combination C would be used for new generation 3D printing technology and equipment, motor direct drive CNC products, etc., and this aspect represents high socio-economic impacts.

Acknowledgements

This research was funded in part by the National Natural Science Foundation of China, grant number 51307170.

Yueyu Wu and Mengdi Liu contributed equally.

References

Baginsky, I.J. and Kostsov, E.G. (2019) 'Nanometer gap in electromechanical converters – a way to achieve an extremely high energy density', *Micromachines*, Vol. 10, No. 11, pp.1–12.

Chang, X.F., Chen, Y.P., Ai, W. and Zhou, Z.D. (2008) 'Design and control application of voice coil motor', *Micromotors*, Vol. 41, No. 11, pp.66–69.

Dang, H.Z., Li, J.Q., Tan, J., Zhao, Y.B., Zha, R., Zhang, T., Zhao, B.J., Zhao, Y.J., Tan, H. and Xue, R.J. (2019) 'Theoretical modeling and experimental verification of the motor design for a 500g micro moving-coil linear compressor operating at 90–140Hz', *International Journal of Refrigeration*, Vol. 104, pp.502–512.

Ding, N., Deng, F., Cai, Y.U., Gui, P. and Fan X.Y. (2019) 'Wearable human foot mechanical energy harvesting device based on moving-coil generator', *CCC 2019: Proceedings of the 38th Chinese Control Conference*, Guangzhou, China, pp.6498–6503.

Feng, X.M., Li, L.S., Li, H.X. and Zhang, D.W. (2014) 'Voice coil actuator characteristics study', *Small & Special Electrical Machines*, Vol. 42, No. 12, pp.38–40.

Hirohisa, T. (2000) 'History of the proportional electromagnetic solenoid', *JFPS 2000: Proceedings of the Japan Fluid Power System Society*, Tokyo, Japan, pp.50–56.

Kim, Y.J. and Jung, S.Y. (2009) 'Cogging force verification of the back-yoke length of a moving-coil-type slotless linear synchronous motor', *Journal of Magnetics*, Vol. 14, No. 1, pp.47–51.

Lindler, J.E. and Anderson, E.H. (2002) 'Piezoelectric direct drive servo valve. Industrial and commercial applications of smart structures technologies', *SPIE 2002: Proceedings of Industrial and Commercial Applications of Smart Structures Technologies*, San Diego, USA, pp.488–496.

Luo, L.W, Zhang, G., Liang, J.M., Wang, W.J, Xu, Z., Gu, X., Guo, Y.P. and Laing, S.S. (2016) 'Study on high response characteristics of a moving coil linear motor', *Machine Tool and Hydraulics*, Vol. 44, No. 17, pp.54–58.

Meng, B., Ruan, J. and Li, S. (2011) 'Research on dynamic characteristics of rotary electromagnet with low inertia', *China Mechanical Engineering*, Vol. 22, No. 20, pp. 2407–2410.

Nowak, L. (1989) 'Field diffusion in magnetic circuits containing moving conducting parts', *Electrical Engineering*, Vol. 72, No. 1, pp.11–18.

Stachowiak, D. and Demenko, A. (2020) 'Finite element and experimental analysis of an axisymmetric electromechanical converter with a magnetostrictive rod', *Energies*, Vol. 13, No. 5, pp.11–12.

Tan, K.K., Lee, T.H., Dou H. and Zhao, S. (2004) 'Force ripple suppression in iron-core permanent magnet linear motors using an adaptive dither', *Journal of the Franklin Institute*, Vol. 341, No. 4, pp.375–390.

Tang, K. and Xu, Y.M. (2019) 'Simulation optimization and production of high-frequency valve with proportional solenoid', *Computer Simulation*, Vol. 36, No. 4, pp.157–162.

Tominari, Y. and Sato, Y. (2019) 'Three-phase AC linear proportional solenoid actuator with zero hysteresis in current-thrust force characteristics', *IEEE Transactions on Magnetics*, Vol. 55, No. 7, pp.1–8.

Wang, S.J., Weng, Z.D. and Jin, B. (2020) 'A performance improvement strategy for solenoid electromagnetic actuator in servo proportional valve', *Applied Sciences*, Vol. 10, No. 12, pp.1–19.

Wang, X.P., Quan, L., Luan, S.Y. and Xu, X.Q. (2019) 'Dynamic and static characteristics of double push rods electromechanical converter', *Chinese Journal of Mechanical Engineering*, Vol. 32, No. 62, pp.1–11.

Wu, A., Xu, S. G., Chang, X.F., Du, Z.Q. and Chen, Y.P. (2007) 'Motion control system of high response linear motor for ellipse machining', *Micromotors*, Vol. 40, No. 2, pp.9–12.

Yan, L., Zhang, L., Peng, L. and Jiao, Z.X. (2018) 'Comparative Study of the dual layer magnet array in a moving-coil tubular linear pm motor', *Sensors*, Vol. 18, No. 6, pp.1–17.

Yao, B. and Xu, L. (2002) 'Adaptive robust motion control of linear motors for precision manufacturing', *Mechatronics*, Vol. 12, No. 4, pp.595–616.

Zhang, G., Yu, L.Y. and Ke, J. (2007) 'High frequency moving coil electromechanical converter', *Electric Machines and Control*, Vol. 11, No. 3, pp.298–302.